7. Radiator

A: REMOVAL

CAUTION:
The radiator is pressurized. Wait until engine cools down before working on the radiator.

1) Set the vehicle on a lift.
2) Disconnect the ground cable from the battery.

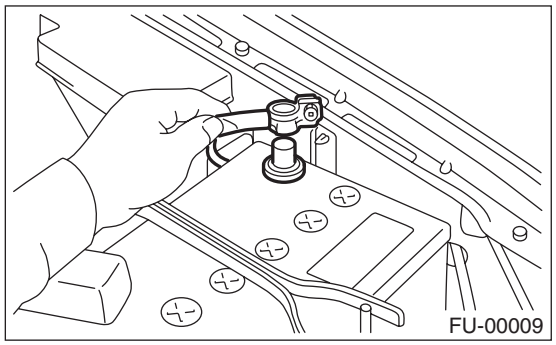

3) Lift up the vehicle.
4) Remove the under cover.
5) Drain engine coolant completely.
<Ref. to CO(H4DOTC)-19, DRAINING OF ENGINE COOLANT, REPLACEMENT, Engine Coolant.>
6) Disconnect the connectors of radiator main fan (A) and sub fan motor (B).

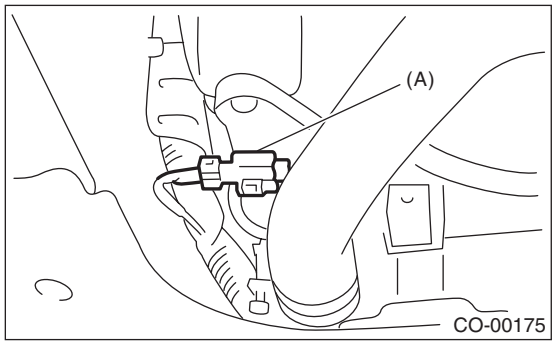

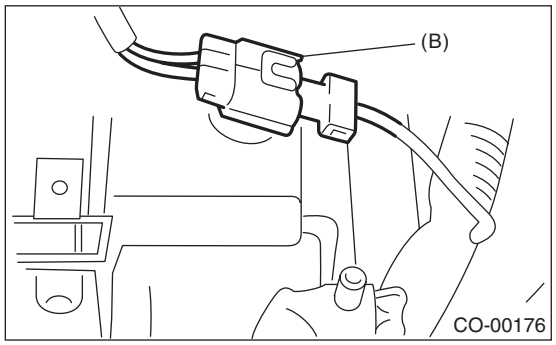

7) Disconnect the ATF cooler hoses from ATF pipes. Plug the ATF pipe to prevent ATF from leaking. (AT model)

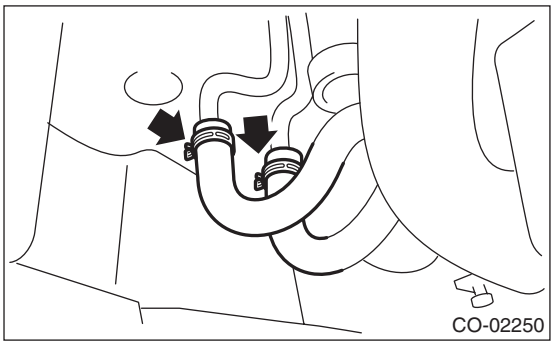

8) Disconnect the radiator outlet hose from thermostat cover.

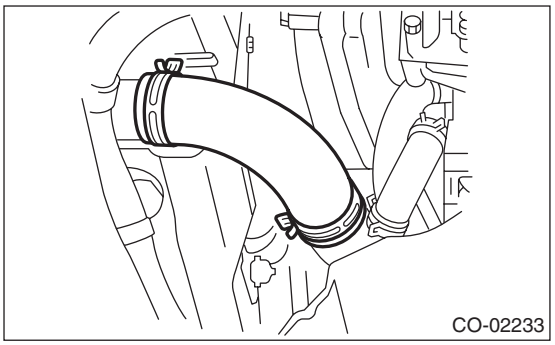

9) Lower the vehicle.
10) Remove the air intake duct. <Ref. to IN(H4DOTC)-11, REMOVAL, Air Intake Duct.>
11) Remove the V-belt covers.

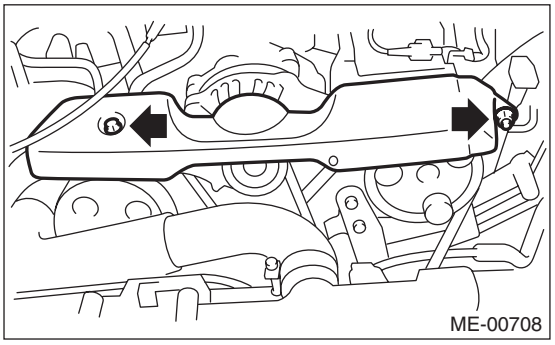

12) Remove the reservoir tank. <Ref. to CO(H4DOTC)-34, REMOVAL, Reservoir Tank.>

13) Disconnect the radiator inlet hose (A), engine air breather hose (B) and over flow hose (C) from the radiator.

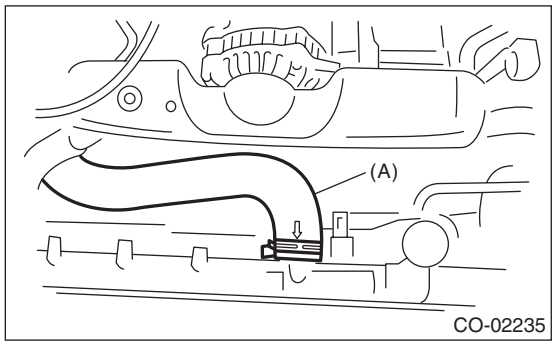

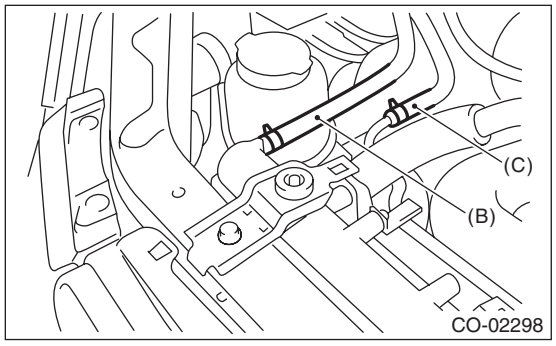

14) Remove the radiator upper brackets.

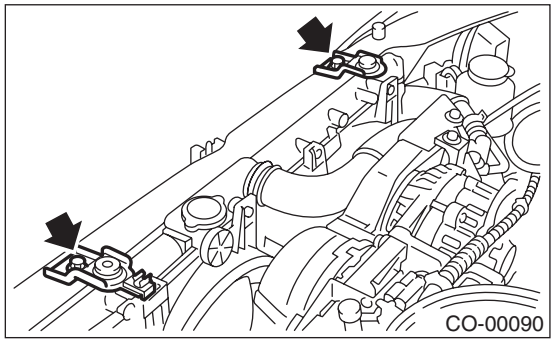

15) Move the radiator to the left while lifting it upward.
16) Lift the radiator up and away from vehicle.

B: INSTALLATION

1) Attach the radiator lower cushion to the hole on the radiator lower bracket.

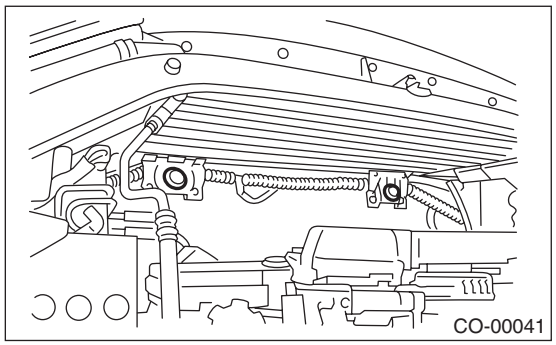

2) Install the radiator to vehicle.

NOTE:
Make pins on the lower side of radiator be fitted into the radiator lower cushions on body side.

3) Install the radiator upper brackets and tighten the bolts.

Tightening torque:
18 N·m (1.8 kgf-m, 13.0 ft-lb)

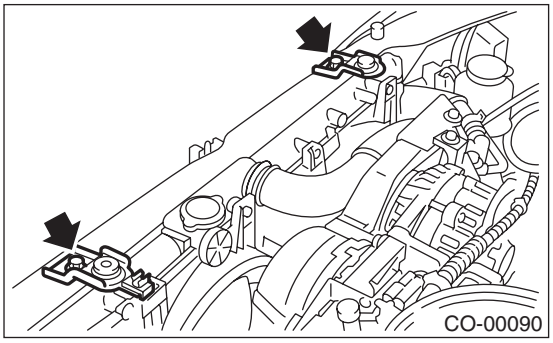

4) Connect the radiator inlet hose (A), engine air breather hose (B) and over flow hose (C).

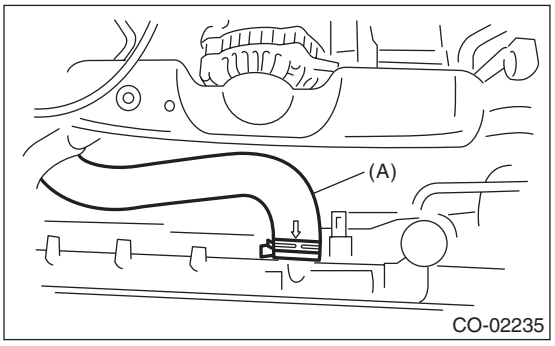

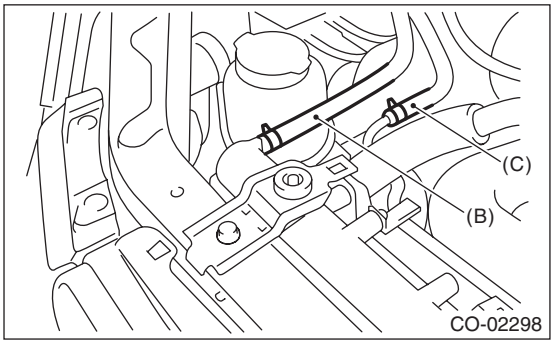

5) Install the reservoir tank. <Ref. to CO(H4DOTC)-34, INSTALLATION, Reservoir Tank.>

6) Install the V-belt cover.

Tightening torque:
Bolt:
13.7 N·m (1.4 kgf-m, 10.1 ft-lb)
Nut:
4 N·m (0.4 kgf-m, 2.95 ft-lb)

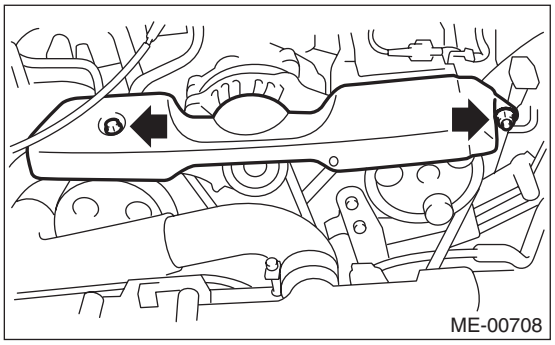

7) Install the air intake duct.
<Ref. to IN(H4DOTC)-11, INSTALLATION, Air Intake Duct.>
8) Lift up the vehicle.
9) Connect the ATF cooler hoses. (AT model)

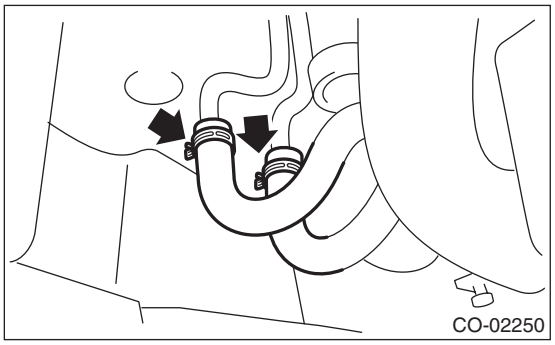

10) Connect the radiator outlet hose.

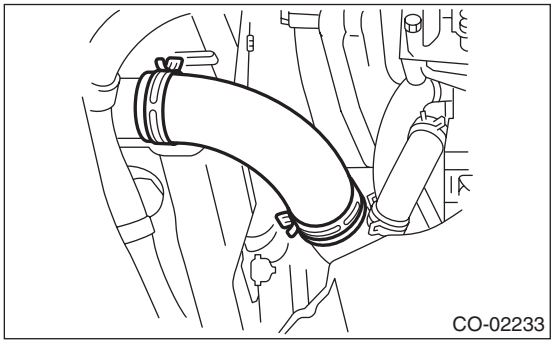

11) Connect the connectors to the radiator main fan motor (A) and sub fan motor (B).

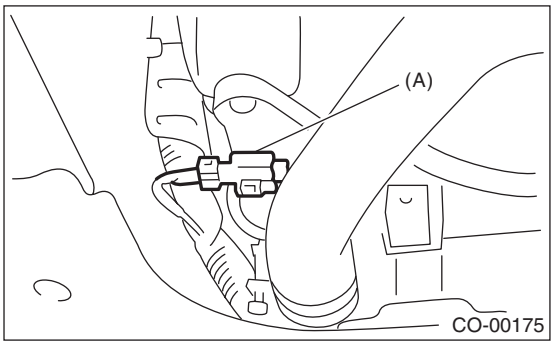

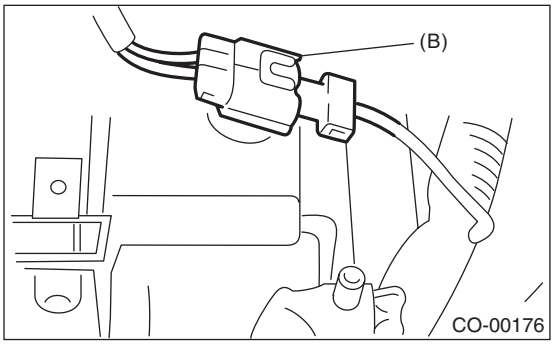

12) Install the under cover.
13) Lower the vehicle.
14) Connect the ground cable to the battery.

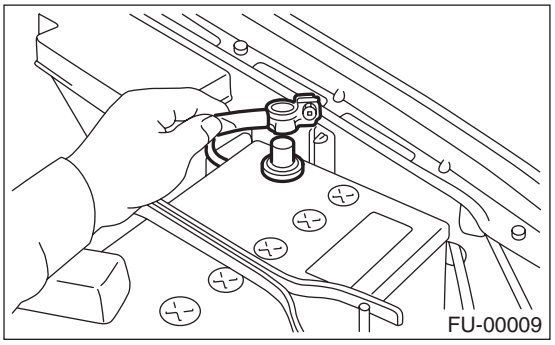

15) Fill engine coolant.
<Ref. to CO(H4DOTC)-19, FILLING OF ENGINE COOLANT, REPLACEMENT, Engine Coolant.>
16) Check the ATF level. <Ref. to 4AT-28, INSPECTION, Automatic Transmission Fluid.>

C: INSPECTION

1) Remove the coolant filler tank cap, fill the coolant filler tank with engine coolant, then install the tester to the installation position of the cap.

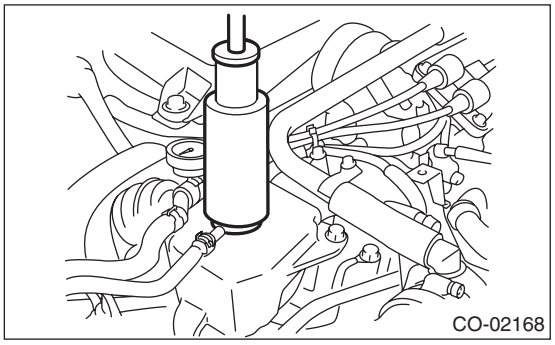

2) Apply a pressure of 122 kPa (1.2 kgf/cm^2, 18 psi) to the radiator and check the following items:
   (1) Leakage from the radiator or its vicinity
   (2) Leakage from the hose or its connections

CAUTION:
- **Inspection must be carried out at the side of coolant filler tank, not at the side of radiator.**
- **Engine should be turned off.**
- **Wipe engine coolant from check points in advance.**
- **Be careful of the spurt of engine coolant when removing the tester.**
- **Be careful not to deform the filler neck of the coolant filler tank when installing and removing the tester.**